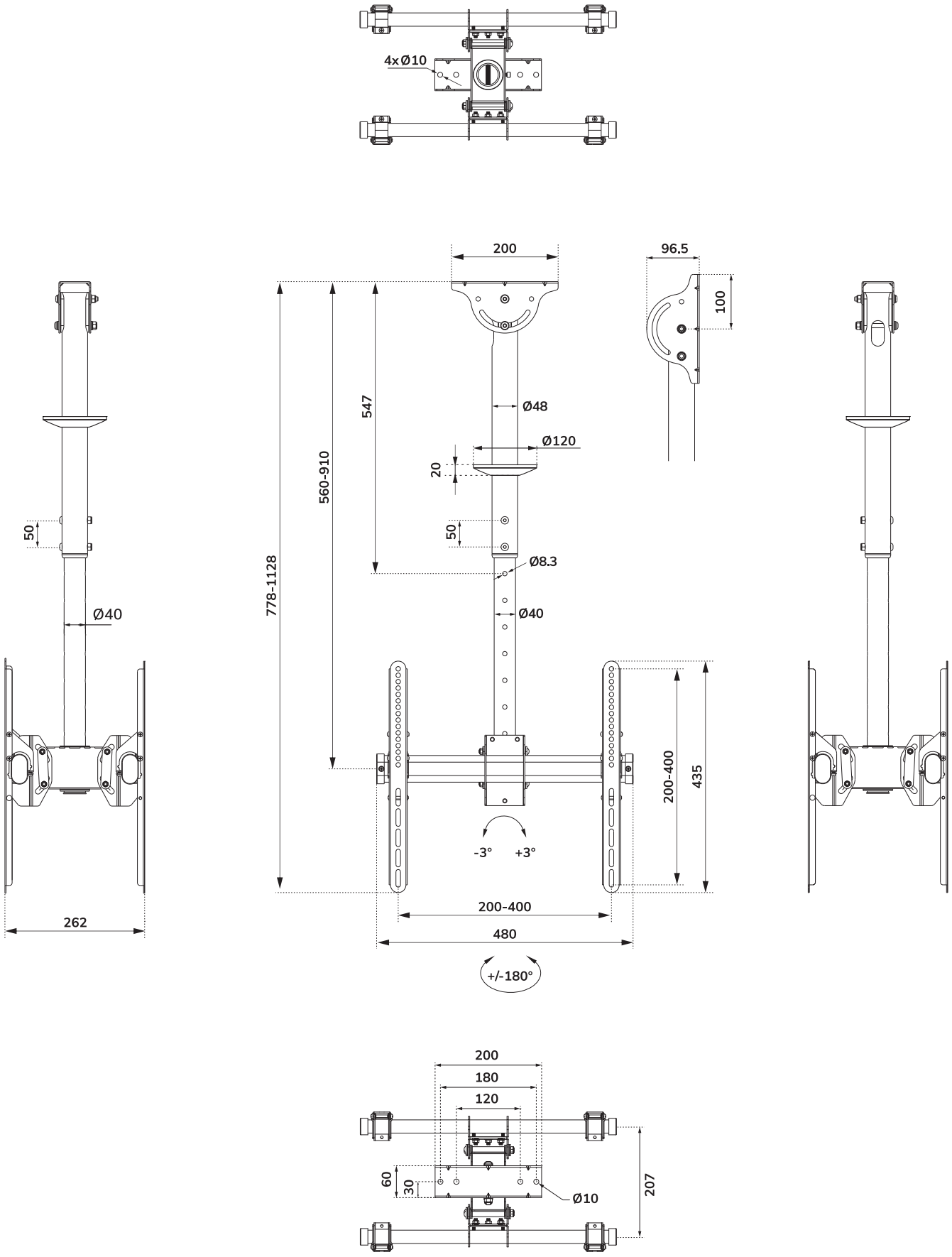

Measuring unit: mm

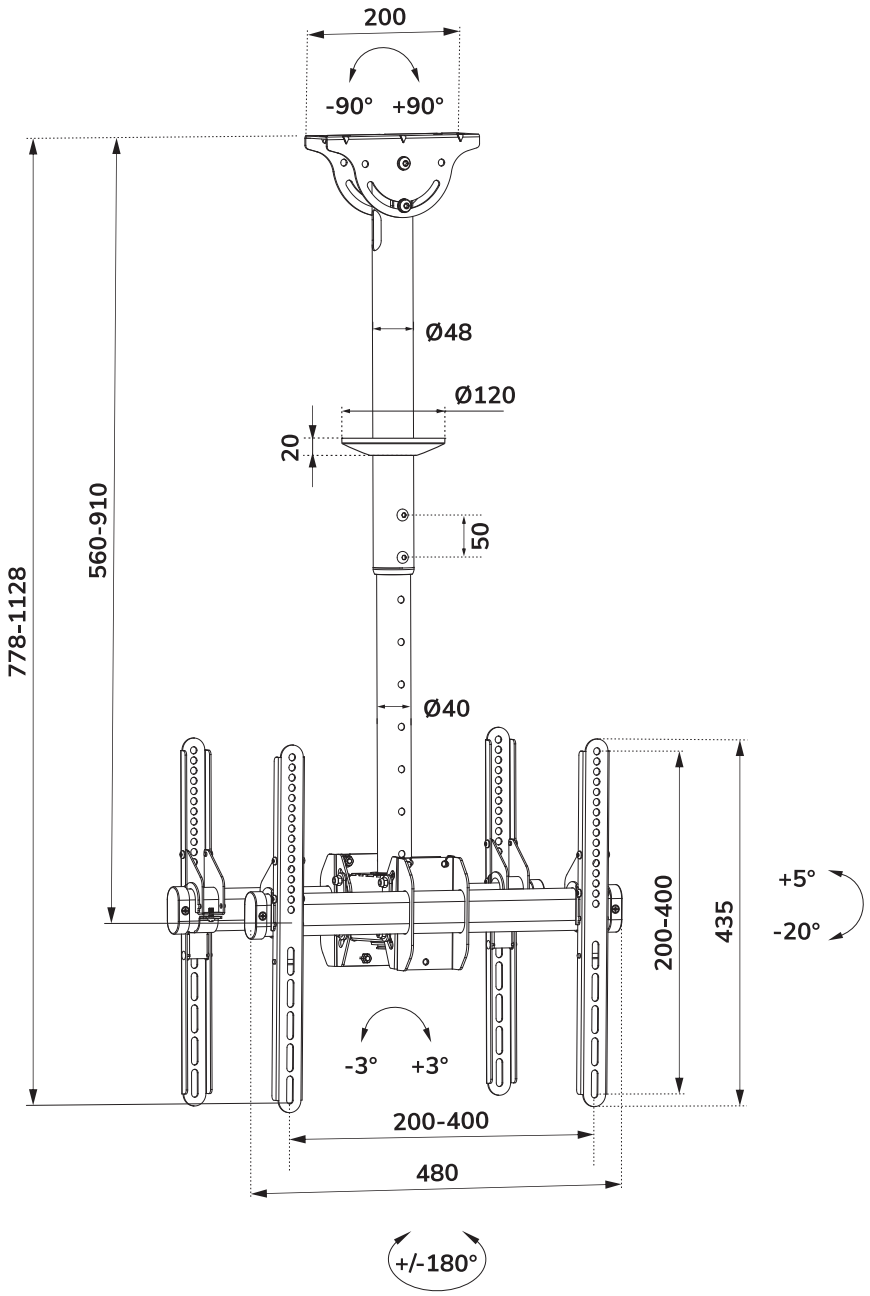

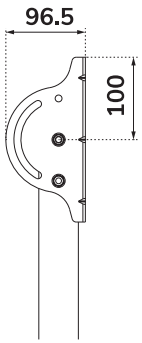

Measuring unit: mm